BX61 (AF combination) dimensions
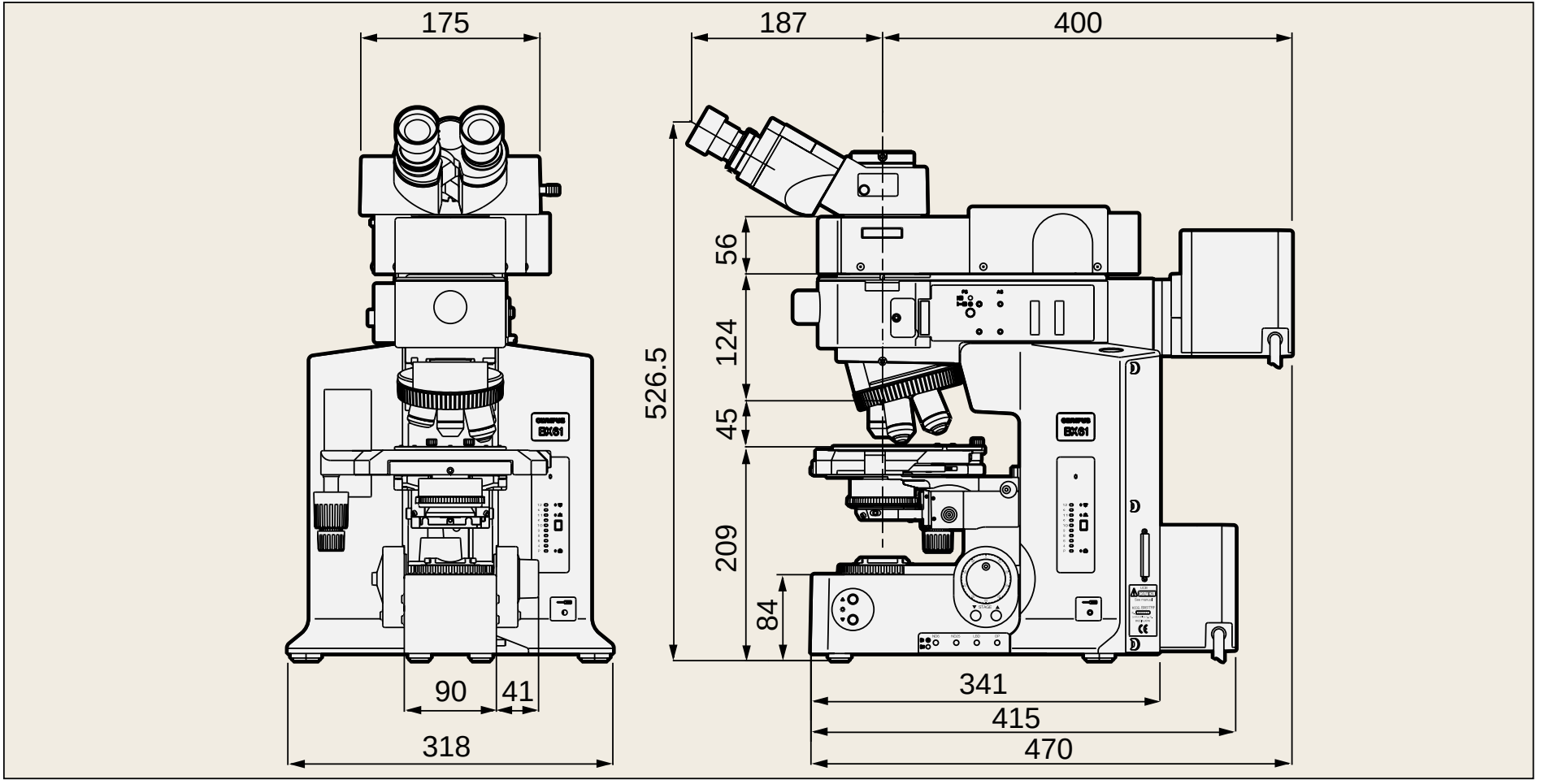
(unit: mm)